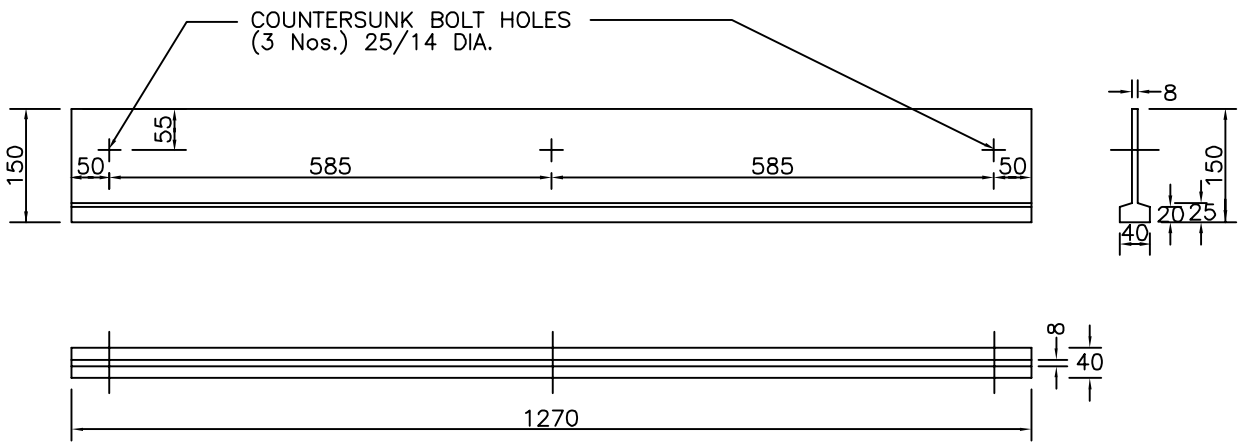

① WEAR PLATE (PART NO. 64. 08. 1450)
(ASCENDING SIDE INNER)

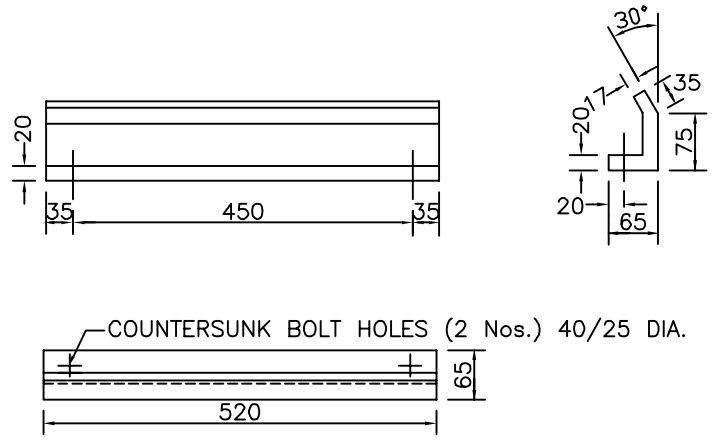

② WEAR STRIP (PART NO. 64. 08. 1329)
(ASCENDING SIDE BOTTOM)

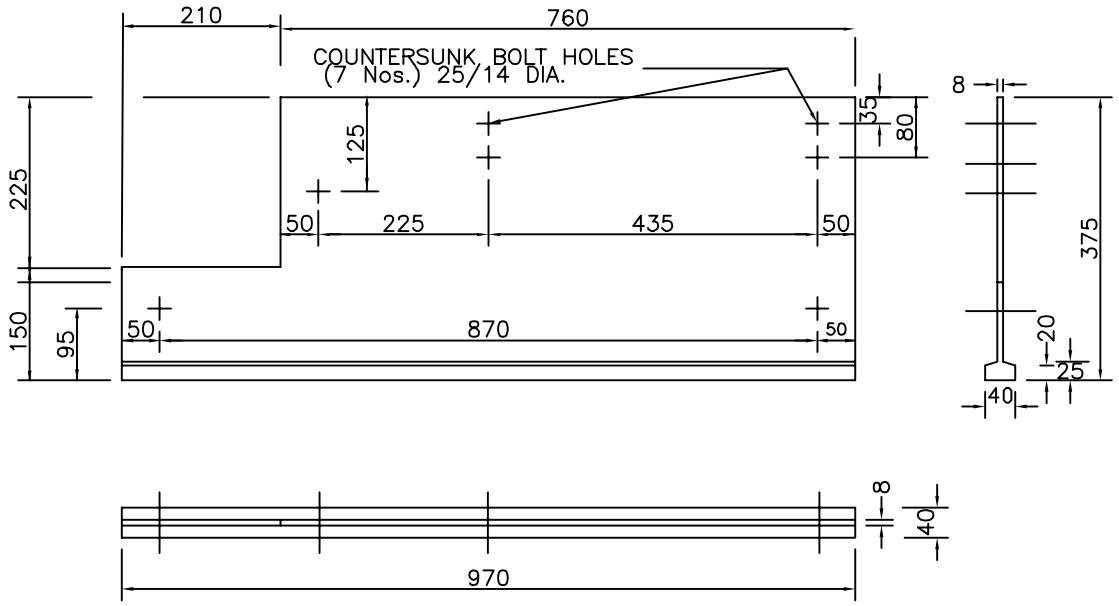

③ WEAR PLATE (PART NO. 64. 08. 1620)
(ASCENDING SIDE INNER)

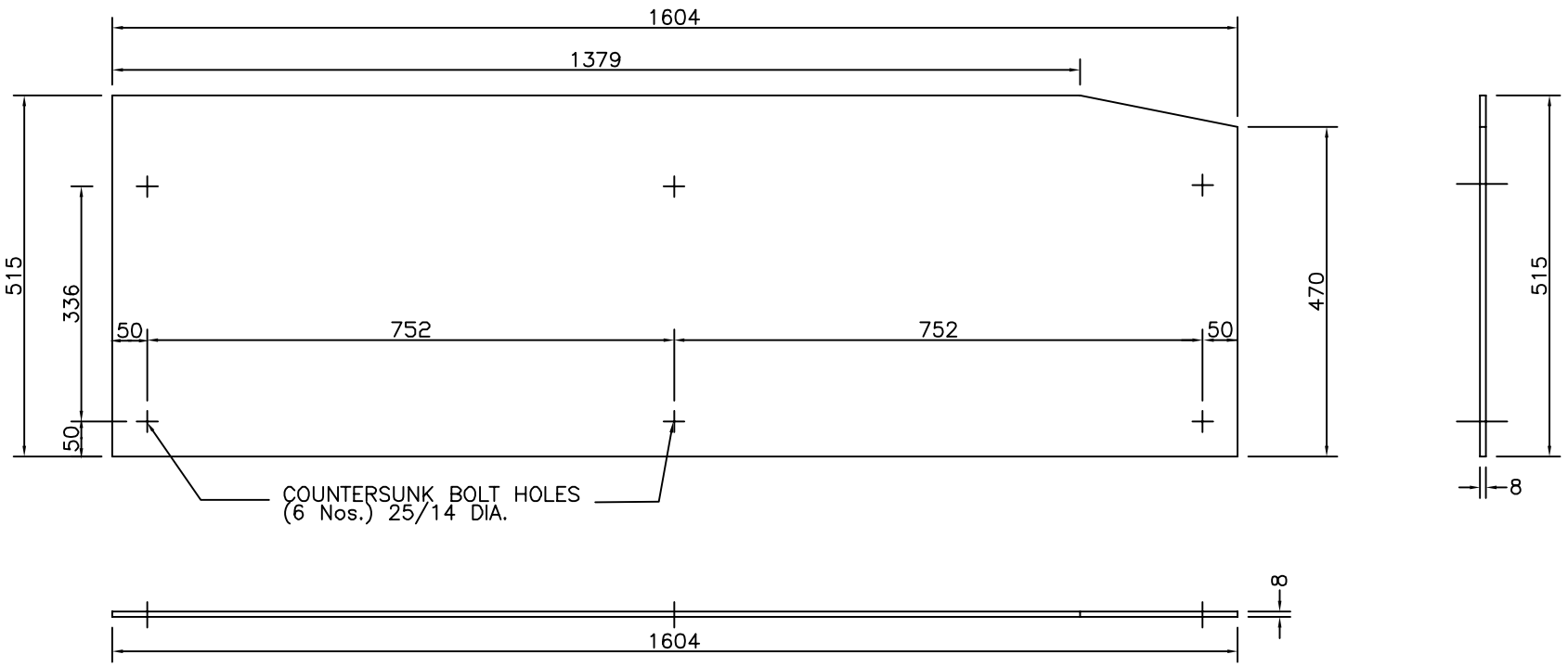

④ WEAR PLATE(PART NO. 64. 08. 1642)
(ASCENDING SIDE OUTER)

5. LOCATION, NOS AND DIA OF COUNTER SUNK HOLE MAY DIFFER FROM M/C TO M/C . EXACT LOCATION AND DIA MAY BE ENSURED BEFORE PLACING THE ORDER FOR MANUFACTURING.
4. TOLERANCES MAY BE INDICATED INDIVIDUALLY UPON SUITABILITY OF FITMENTS.
3. HEAT TREATMENT: OIL HARDENED AND TEMPERED.
2. MATERIAL COMPOSITION AND OTHER DETAILS REFER TO RDSO SPECIFICATION NO. TM/HM/6/15 REV-2(2015)
1. ALL DIMENSIONS ARE IN MILLIMETERS.

RDSO SPECIFICATION NO.
TM/HM/6/15
REV-2 (2015)

R. D. S. O.

WEAR PLATES FOR BALLAST CLEANING MACHINE

(PROVISIONAL)

CANCLD./SUPSED.
REVED. REV-1(2015)

N O T E S	SPECIFICATIONS	SCALE	ALT.	DESCRIPTION	AUTHY.	DRG.NO. TM/9415/6 REV-1